HEARTLAND Surveying

Jim Shamp

5210 Twp. Rd. 257 Millersburg, OH 44654

Phone: 216-674-4698

SURVEY			DATE
ELMER HALL			APRIL 2, 1992
STATE	COUNTY	TOWNSHIP	RANGE
OHIO	RICHLAND	SHARON	
TOWNSHIP	CITY OF SHELBY		

I CERTIFY THIS TO BE A TRUE PLAT OF A FIELD SURVEY COMPLETED ON APRIL 2, 1992:

JIM SHAMP, REG. SUR. NO. S-6088

STATE OF OHIO
JAMES RICHARD SHAMP
S-6088
REGISTERED PROFESSIONAL
SURVEYOR

NOTE: THIS SURVEY IS A RETRACEMENT AND THIS PLAT IS FOR INFORMATION ONLY.

ANGLES: (A) = 90° 37' 35"

(B) = 90° 37' 35"

(C) = 90° 30' 45"

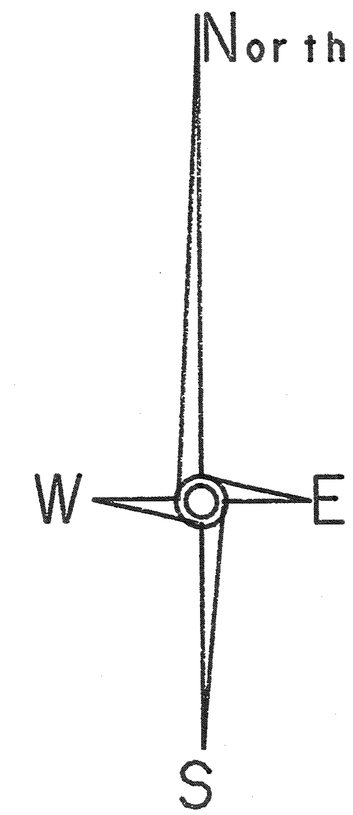

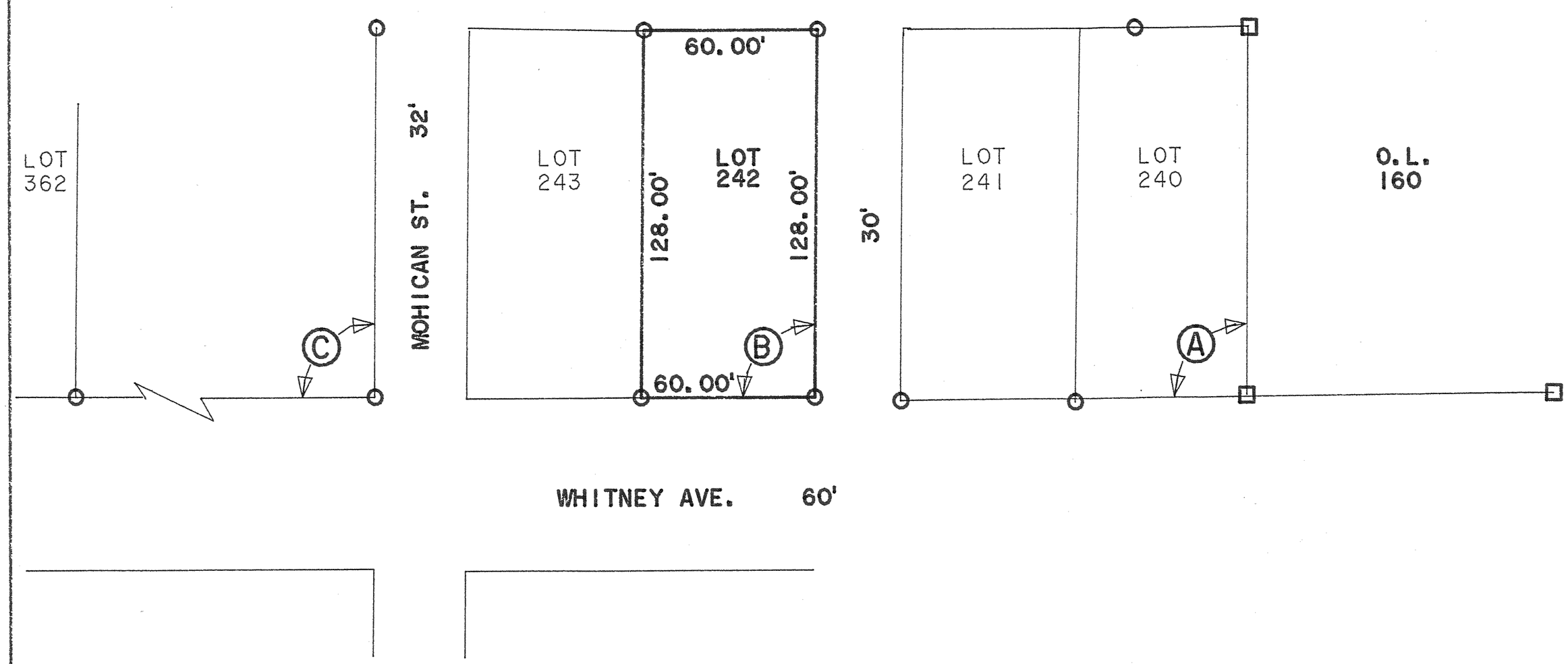

LEGEND:
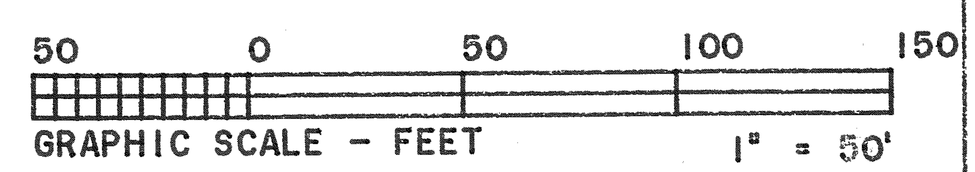
- ○ = I.P. FOUND
- ○ = I.P. SET (5/8" X 30" RE-BAR W/PLASTIC CAPS STAMPED "JIM SHAMP - 6088")
- □ = BRASS MARKER FOUND ("CHARLES R. BLOSSER SURVEYOR MANSFIELD, OH")